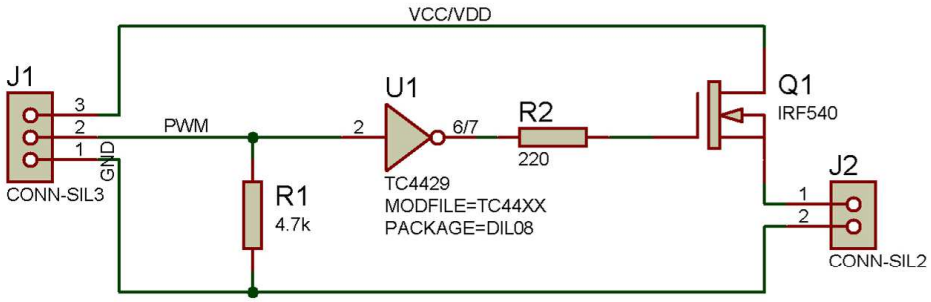
VCC/VDD
J1
3
2
1
GND
CONN-SIL3
PWM
R1
4.7k
U1
2
6/7
TC4429
MODFILE=TC44XX
PACKAGE=DIL08
R2
220
Q1
IRF540
J2
1
2
CONN-SIL2